NAME: _____

SOLVING EQUATIONS

Instructions: Start at the beginning. Complete the maze by following the path of the correct answers until you reach the exit! Draw arrows to show the path you took.

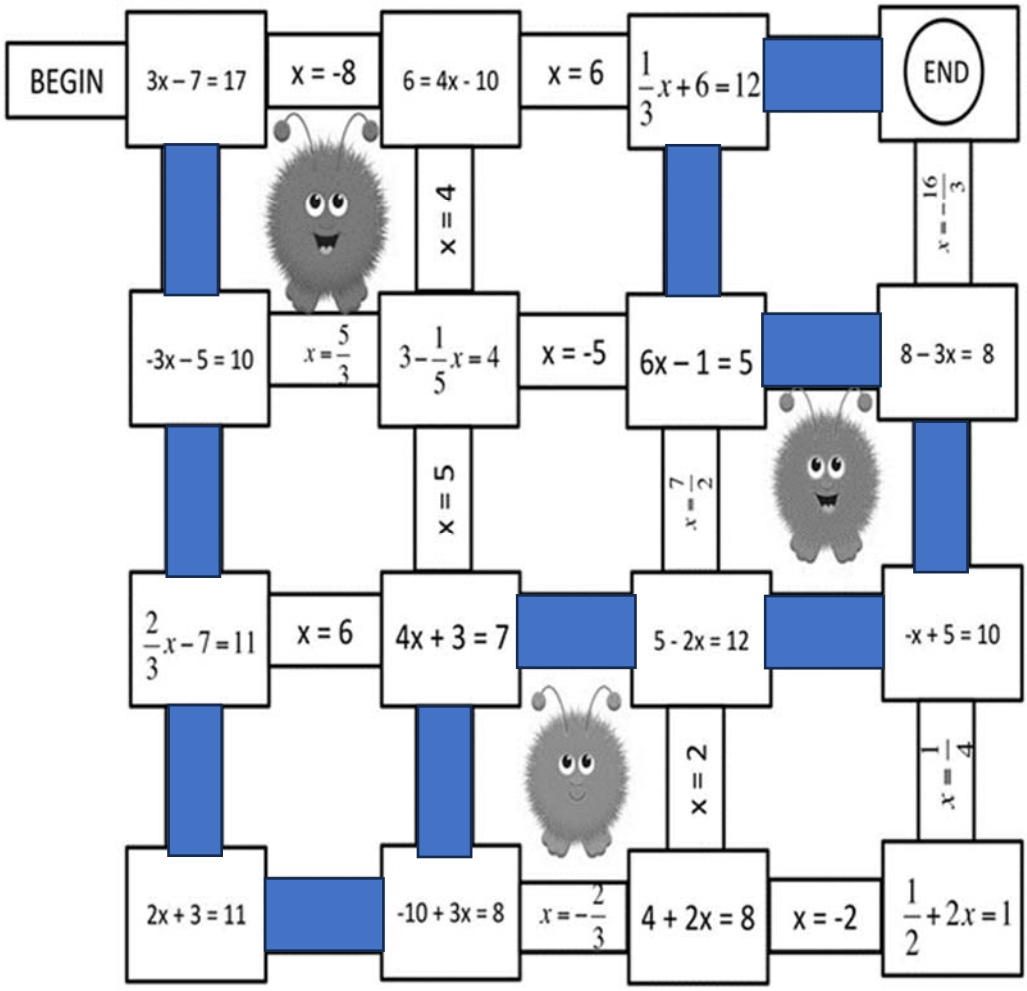

HOW DID YOU DO? ☺ 😐 ☹

© 15Worksheets.com